DWG. NO G150-501-B

NO	PART NAME	MATERIAL	Q'TY	REMARK
1				

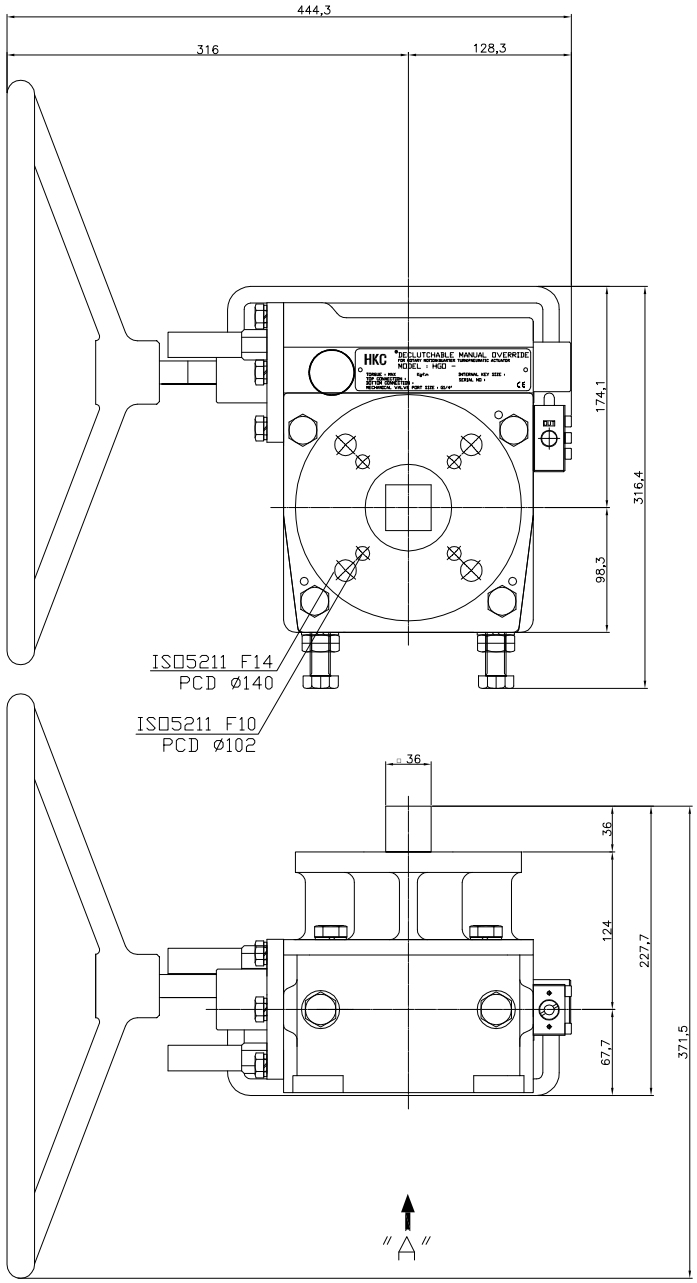

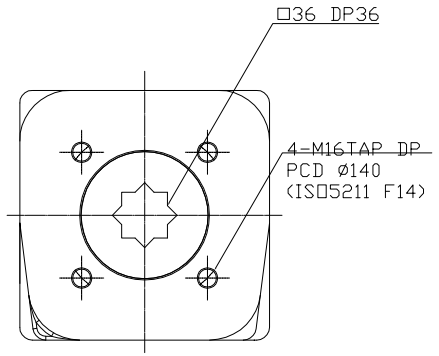

VIEW "A"
(MOUNTING BASE)

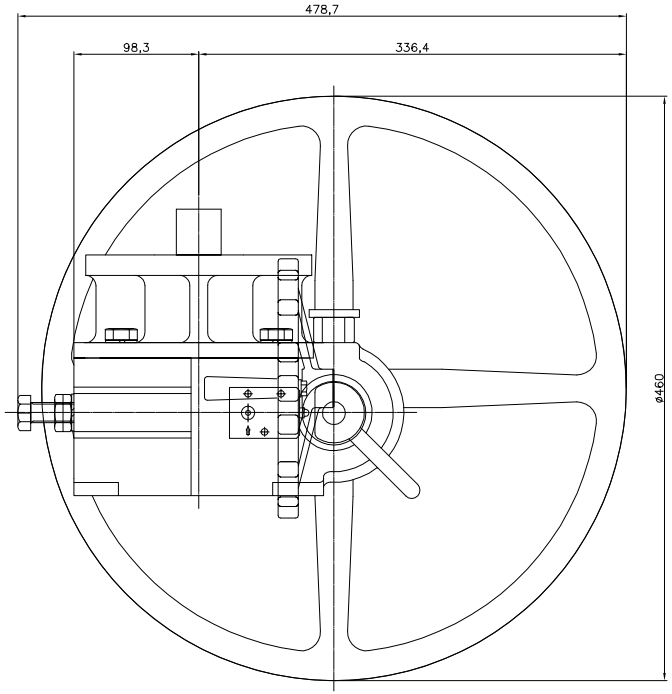

MATERIAL	PROJ.	SYM	ECN NO	CHANGES		DATE	SIGN	APPR.
ALT. MAT.	DRAW K.J JUNG	SCALE 1/1	ISSU. DEPT. HADR		PART NAME	HG150 LAY OUT		
HEAT TREAT.	DESIGN P.S KIM	DIM. mm	DATE 2007.10.17					
SURF. TRET.	CHECK	HKC			DWG. NO G150-501-B			
	APPR.	HKC CO., LTD.			1 OF 1 SHEET	DWG. SIZE A0		